SALES SUPPORT GUIDE

Version 2 (April 2022)

NEXT
PLUMBING • HYDRONICS

Table of Contents

Residential	
One-Piece Toilets	2 - 3
Two-Piece Toilets	4 - 5
WASHLETs	6
Wall-Hung Toilets	7
Lavatories	7
Faucets	8
Commercial	
Lavatories	9
Faucets	10
Flush Valves	11
Toilets	12
Urinals	12
Seats	13
TOTO Product Number Charts	14-15
TOTO Icon Guide	16-17

RESIDENTIAL

ONE-PIECE TOILETS – Seats sold separately.

ULTRAMAX II	CARLYLE II	LEGATO
4.8L UNIVERSAL HEIGHT W/ CEFIONTECT COTTON	4.8L UNIVERSAL HEIGHT W/ CEFIONTECT SKIRTED - COTTON	4.8L UNIVERSAL HEIGHT W/ CEFIONTECT SKIRTED - COTTON
CST604CEFGAT40#01	CST614CEFGAT40#01	CST624CEFGAT40#01

AIMES	SUPREME II	NEXUS
4.8L UH W/ CEFIONTECT SKIRTED - COTTON	4.8L UH W/ CEFIONTECT COTTON	4.8L UH W/ CEFIONTECT SKIRTED - COTTON
CST626CEFGAT40#01	CST634CEFGT40#01	CST642CEFGAT40#01

CAROLINA II	AQUIA IV
4.8L UNIVERSAL HEIGHT W/ CEFIONTECT SKIRTED - COTTON	4.8L/3L UNIVERSAL HEIGHT W/ CEFIONTECT SKIRTED - COTTON
CST644CEFGT40#01	CST646CEMFGAT40#01

ONE-PIECE TOILETS – Seats included.

PROMENADE II	ECO-ULTRAMAX	ECO-ULTRAMAX
4.8L UNIVERSAL HEIGHT W/ CEFIONTECT COTTON	4.8L ROUND FRONT REGULAR HEIGHT COTTON	4.8L REGULAR HEIGHT ELONGATED COTTON
MS814224CEFG#01	MS853113E#01	MS854114E#01

ECO-ULTRAMAX	ECO-ULTRAMAX	ECO SOIRÉE
4.8L ADA HEIGHT ELONGATED COTTON	4.8L ADA HEIGHT W/ CEFIONTECT ELONGATED - COTTON	4.8L UNIVERSAL HEIGHT W/ CEFIONTECT SKIRTED - COTTON
MS854114EL#01	MS854114ELG#01	MS964214CEFG#01

TWO-PIECE TOILETS – Seats sold separately.

AQUIA IV	AQUIA IV	AQUIA IV
3.8L/3L UNIVERSAL HEIGHT W/ CEFIONTECT COTTON **WASHLET+ AVAILABLE	3.8L/3L REGULAR HEIGHT W/ CEFIONTECT COTTON **WASHLET+ AVAILABLE	4.8L/3L UNIVERSAL HEIGHT W/ CEFIONTECT COTTON **WASHLET+ AVAILABLE
CST446CUMFG#01 CT446CUFG#01 (BOWL) ST446UMA#01 (TANK)	CST446CUMG#01 CT446CUG#01 (BOWL) ST446UMA#01 (TANK)	CST446CEMFG#01 CT446CUFG#01 (BOWL) ST446EMA#01 (TANK)

AQUIA IV	AQUIA IV ARC	AQUIA IV CUBE
4.8L/3L REGULAR HEIGHT W/ CEFIONTECT COTTON **WASHLET+ AVAILABLE	4.8L/3L UNIVERSAL HEIGHT W/ CEFIONTECT COTTON **WASHLET+ AVAILABLE	4.8L/3L UNIVERSAL HEIGHT W/ CEFIONTECT COTTON **WASHLET+ AVAILABLE
CST446CEMG#01 CT446CUG#01 (BOWL) ST446EMA#01 (TANK)	CST448CEMFG#01 CT446CUFG#01 (BOWL) ST448EMA#01 (TANK)	CST436CEMFG#01 CT446CUFG#01 (BOWL) ST436EMA#01 (TANK)

DRAKE	DRAKE	DRAKE
4.8L ADA HEIGHT COTTON **WASHLET+ AVAILABLE	4.8L REGULAR HEIGHT COTTON **WASHLET+ AVAILABLE	4.8L ROUND REGULAR HEIGHT COTTON **WASHLET+ AVAILABLE
CST776CEFG#01 C776CEFG#01 (BOWL) ST776EA#01 (TANK)	CST776CEG#01 C776CEG#01 (BOWL) ST776EA#01 (TANK)	CST775CEFG#01 C775CEFG#01 (BOWL) ST776EA#01 (TANK)

DRAKE II	ENTRADA
4.8L UNIVERSAL HEIGHT COTTON **WASHLET+ AVAILABLE	4.8L UNIVERSAL HEIGHT COTTON
CST454CEFG#01 C454CUFG#01 (BOWL) ST454EA#01 (TANK)	CST244EF#01 C244EF#01 (BOWL) ST243E#01 (TANK)

ENTRADA	PROMENADE II
4.8L ROUND FRONT UNIVERSAL HEIGHT COTTON	4.8L UNIVERSAL HEIGHT W/ CEFIONTECT COTTON
CST243EF#01 C243EF#01 (BOWL) ST243E#01 (TANK)	CST404CEFG#01 C404CUFG#01 (BOWL) ST403E#01 (TANK)

WASHLETs

S550E	S500E
W/ AUTO FLUSH, AUTO OPEN CLOSE, NIGHT LIGHT, PREMIST & E WATER+ (WAND & BOWL)	W/ AUTO FLUSH, PREMIST & E WATER+ (WAND AND BOWL)
SW3056#01 SW3056AT40#01 - w/ WASHLET+ TOILET - THU765 AUTOFLUSH KIT FOR AQUIA IV - THU766 AUTOFLUSH KIT FOR 3.8L - THU767 AUTOFLUSH KIT FOR 4.8L - 9AU321-A REQUIRED ON TWO-PIECE AQUIA (IV, ARC, AND CUBE) & NEXUS	SW3046#01 SW3046AT40#01 - w/ WASHLET+ TOILET - THU765 AUTOFLUSH KIT FOR AQUIA IV - THU766 AUTOFLUSH KIT FOR 3.8L - THU767 AUTOFLUSH KIT FOR 4.8L - 9AU321-A REQUIRED ON TWO-PIECE AQUIA (IV, ARC, AND CUBE) & NEXUS

C5	C2
W/ PREMIST & E WATER+ (WAND ONLY)	W/ PREMIST & E WATER+ (WAND ONLY), NO INDEPENDENT REMOTE
SW3084#01 SW3084T40#01 - w/ WASHLET+ TOILET - 9AU321-A REQUIRED ON TWO-PIECE AQUIA (IV, ARC, AND CUBE) & NEXUS	SW3074#01 SW3074T40#01 - w/ WASHLET+ TOILET - 9AU321-A REQUIRED ON TWO-PIECE AQUIA (IV, ARC, AND CUBE) & NEXUS

WALL-HUNG TOILETS

4.8L EP WALL HUNG WITH CEFIONTECT COTTON	4.8L AP WALL HUNG WITH CEFIONTECT COTTON
CT428CFG#01 COMPLETE KIT INCLUDES (CWT428CMFG): WT172M YT930#WH/YT930#MS SS114#01	CT426CFG#01 COMPLETE KIT INCLUDES (CWT426CMFG): WT172M YT930#WH/YT930#MS SS114#01

RESIDENTIAL LAVATORY

ROUND VESSEL	UNDERMOUNT	RECTANGLE VESSEL
16-9/16" ROUND VESSEL ADA COMPLIANT COTTON	17 11/16" X 13" RECTANGLE ADA COMPLIANT W/ CEFIONTECT COTTON	19-11/16"W x 18-1/8"D x 2-3/4"H RECTANGLE VESSEL ADA COMPLIANT COTTON
LT573#01	LT1535G#01	LT415G#01 - SINGLE LT415.4G#01 - 4" CC LT415.8G#01 - 8" CC

RESIDENTIAL FAUCETS

GE WIDE SPREAD	GE WALL-MOUNT	GE SINGLE-HANDLE
WATERSENSE CERTIFIED LOW-FLOW 1.2GPM METAL POP-UP DRAIN ASSEMBLY INCLUDED POLISHED CHROME 8"-11" SPREAD	WATERSENSE CERTIFIED LOW-FLOW 1.2GPM ADA COMPLIANT DRAIN ASSEMBLY NOT INCLUDED POLISHED CHROME	WATERSENSE CERTIFIED LOW-FLOW 1.2GPM ADA COMPLIANT METAL POP-UP DRAIN ASSEMBLY INCLUDED POLISHED CHROME
TLG07201U#CP	TLG07308U#CP	TLG07301U#CP

COMMERCIAL

COMMERCIAL LAVATORY

UNDERMOUNT	
17" X 14" OVAL ADA COMPLIANT COTTON	17" X 13" RECTANGLE UNDERCOUNTER ADA COMPLIANT COTTON
LT569#01	LT221#01

WHEELCHAIR	WALL-HUNG
20 1/2" X 27" WALL-HUNG ADA COMPLIANT COTTON	20 7/8" X 18" ADA COMPLIANT COTTON
LT308#01 - SINGLE HOLE LT308.4#01 - 4" CC	LT307#01 - SINGLE HOLE LT307.4#01 - 4" CC LT307.8#01 - 8" CC

COMMERCIAL FAUCETS

ECO POWER		
STANDARD-R	**STANDARD-S**	**HELIX**
T28S51 - TOUCHLESS ECO-POWER 0.5GPM 10 SEC ON DEMAND POLISHED CHROME	T27S51 - TOUCHLESS ECO-POWER 0.5GPM 10 SEC ON DEMAND POLISHED CHROME	T26S51 - TOUCHLESS ECO-POWER 0.5GPM 10 SEC ON DEMAND POLISHED CHROME
TLE28002U1#CP - Spout TLE03502U1 - Controller TLM10 - Mixing Valve TLE05701U - Thermo MV	TLE27002U1#CP - Spout TLE03502U1 - Controller TLM10 - Mixing Valve TLE05701U - Thermo MV	TLE26006U1#CP - Spout TLE03502U1 - Controller TLM10 - Mixing Valve TLE05701U - Thermo MV

FLUSH VALVES

TOILET - ECO POWER	
EXPOSED	**CONCEALED**
4.8L EXPOSED TOILET FLUSH VALVE AND VACUUM BREAKER SET TOP SPUD	4.8L CONCEALED TOILET FLUSH VALVE AND VACUUM BREAKER SET BACK SPUD
TET1LA32#CP	TET2LA31#SS

URINAL - ECO POWER	
EXPOSED	**CONCEALED**
1.9L EXPOSED URINAL FLUSH VALVE AND VACUUM BREAKER SET TOP SPUD	1.9L CONCEALED URINAL FLUSH VALVE AND VACUUM BREAKER SET BACK SPUD
TEU1LA12#CP	TEU2LA11#SS

COMMERCIAL TOILETS

FLOOR MOUNTED HIGH-EFFICIENCY W/ CEFIONTECT COTTON	FLOOR MOUNTED ADA HEIGHT HIGH-EFFICIENCY W/ CEFIONTECT COTTON	WALL-MOUNTED ADA HEIGHT HIGH-EFFICIENCY COTTON
CT705UNG#01	CT705ULNG#01	CT708UVG#01 BACK SPUD CT708UG#01 TOP SPUD

COMMERCIAL URINALS

HIGH-EFFICIENCY W/ CEFIONTECT 0.125GPF COTTON	HIGH-EFFICIENCY ADA COMPLIANT 0.5GPF COTTON	HIGH-EFFICIENCY ADA COMPLIANT 0.5GPF COTTON
UT105UG#01 TOP SPUD UT105UVG#01 BACK SPUD	UT447E#01 TOP SPUD UT447EV#01 BACK SPUD	UT104E#01 TOP SPUD UT104EV#01 BACK SPUD

SEATS

RESIDENTIAL

ELONGATED SLOW CLOSE T40 CONNECTION	ROUND SLOW CLOSE	ELONGATED SLOW CLOSE
SS124#01	SS113#01	SS114#01

COMMERCIAL

COMMERCIAL OPEN FRONT W/ COVER COTTON	COMMERCIAL OPEN FRONT NO COVER COTTON
SC134#01	SC534#01

TOTO PRODUCT NUMBER CHART

SEAT

FEATURED SEAT MODEL NUMBERS

PRODUCT CODE
SW: WASHLET
SS: SOFT CLOSE SEAT
SC: COMMERCIAL SEAT

MODEL

COLOR NO.
#01: COTTON
#11: COLONIAL WHITE
#12: SEDONA BEIGE
#03: BONE
#51: EBONY

TOTO PRODUCT NUMBER CHART

TOILET & URINAL

TOILET, URINAL AND LAVATORY MODEL NUMBERS

PRODUCT CODE
CST: GRAVITY TYPE TOILET
CWT: WALL HUNG TOILET & IN-WALL TANK COMPLETE
WT: IN-WALL TANK ONLY
CT: COMMERCIAL TOILET
C: BOWL ONLY
ST: TANK ONLY
UE: URINAL & ELEC. FLUSH VALVE COMBO
UT: URINAL
BT: BIDET
(T MEANS TRIM INCLUDED)

MODEL NO.

TOILET FEATURE
B: BOLTDOWN LID
D: INSULATED TANK
R: RIGHT HAND TRIP LEVER
L: ADA HEIGHT
S: G-MAX FLUSH
C: TORNADO FLUSH
M: DUAL FLUSH
E: E-MAX FLUSH
G: CEFIONTECT
F: UNIVERSAL HEIGHT
BLANK: 12" ROUGH-IN
.10: 10" ROUGH-IN
.14: 14" ROUGH-IN
U: 1.0 GPF

COMMERCIAL TOILET/URINAL FEATURE
BLANK: TOP SPUD
V: BACK SPUD
E: HET/HEU
H: BEDPAN TOILET
U: 1/8 GPF URINAL

BIDET FEATURE
A: SINGLE HOLE
B: VERTICAL SPRAY

COLOR NO.
#01: COTTON
#11: COLONIAL WHITE
#12: SEDONA BEIGE
#03: BONE
#51: EBONY

FLUSH ACTUATOR NO.
THUXXX#XX
#01 - COTTON
#11 - COLONIAL BEIGE
#12 - SEDONA BEIGE
#03 - BONE
#51 - EBONY
#CP - POLISHED CHROME
#PB - POLISHED BRASS
#PN - POLISHED NICKEL
#BN - BRUSHED NICKEL
#SB - SATIN BRASS
#XXR - RIGHT HAND TRIP LEVER

FLUSH PANEL NO.
YTXXX#XX
#WH - WHITE
#CP - POLISHED CHROME
#SS - STAINLESS STEEL

TOTO PRODUCT NUMBER CHART

VALVES & ACCESSORIES

COMMERCIAL FLUSH VALVES MODEL NUMBERS

T: FITTING

M: MANUAL
E: ELECTRONIC

U: URINAL
T: TOILET

1: EXPOSED
2: CONCEALED - 14" X 12"
3: CONCEALED - 4" X 4" PLATE RECESS
6: EXPOSED WITH 24" VACUUM BREAKERS

G: GENERAL
L: LOW FLOW
U: ULTRA HIGH-EFFICIENCY

N: NEUTRAL (FOR LEFT OR RIGHT)
A: 2015 MODEL

BLANK: ORIGINAL
X: RECLAIMED WATER

BLANK: ORIGINAL
R: REVISION
S: REVISION 2
T: REVISION 3

1: 3/4" OUTLET
2: 1-1/4" OUTLET
3: 1-1/2" OUTLET

1: BACK SPUD
2: TOP SPUD
3: BACK SPUD FLOOR MOUNT

FINISH:
#CP: POLISHED CHROME
#SS: STAINLESS STEEL

TOTO PRODUCT NUMBER CHART

COMMERCIAL FAUCETS & VALVES

NEW COMMERCIAL FAUCET KIT MODEL NUMBERS

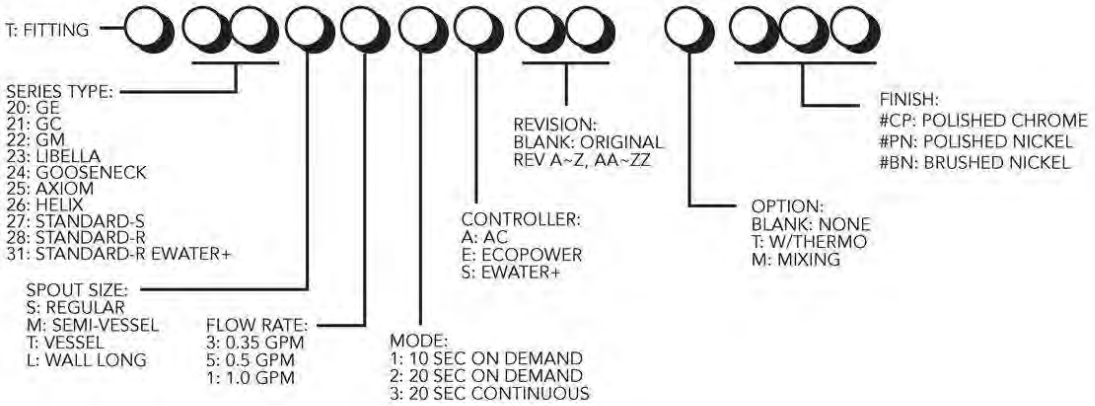

NEW COMMERCIAL SPOUT MODEL NUMBERS

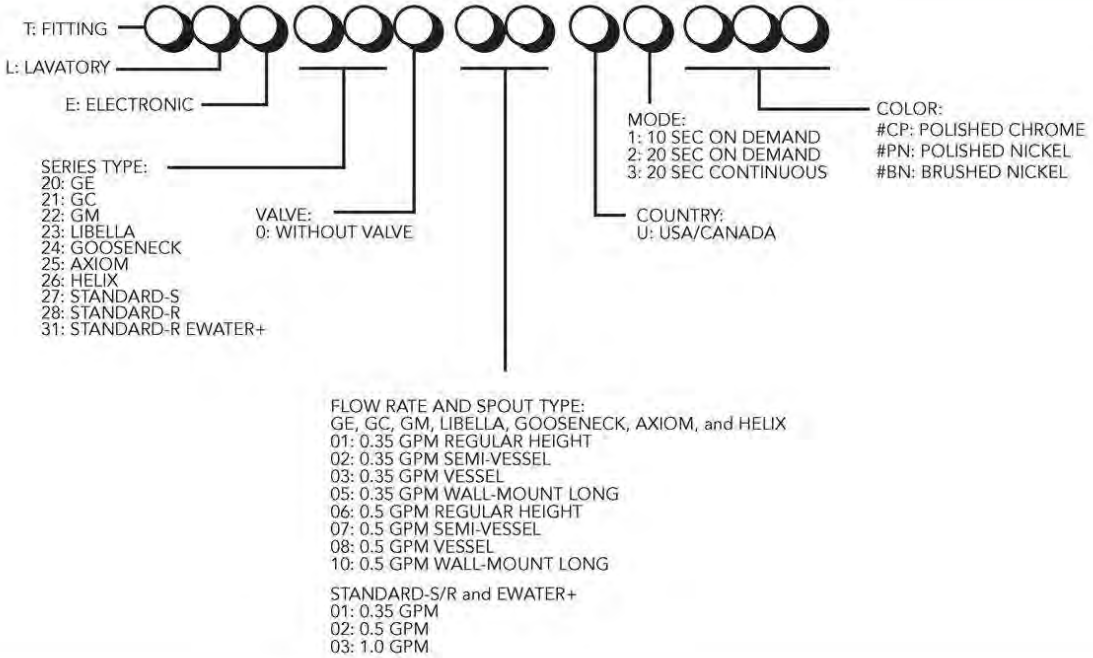

NEW COMMERCIAL CONTROLLER & THERMOSTATIC VALVE MODEL NUMBERS

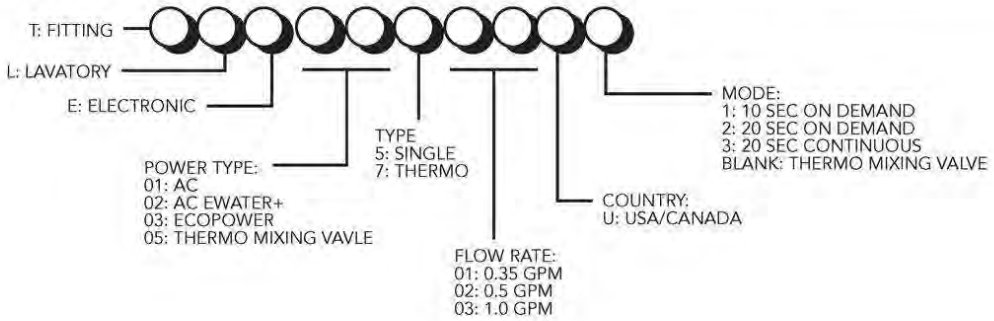

ICON GUIDE

TOILET & LAVATORY

1.0 GPF	Using only 1 gallon per flush, 1G toilets provide the most efficient flush in the industry.
DYNAMAX TORNADO FLUSH®	Uses 100% of water to clean and rinse the bowl using a smaller amount of water more efficiently with a 2.5" trapway and quieter flush. Available in 1.0/.9 GPF or 1.28/.8 GPF.
TORNADO FLUSH®	A state-of-the-art, hole-free rim design that offers dual-nozzle bowl cleansing, creating a centrifugal rinsing action that cleans the bowl more efficiently.
3D TORNADO FLUSH®	Three powerful nozzles create a powerful centrifugal rinsing action and combines it with the conservation of 0.9 or 1.28 GPF.
DUAL-MAX®	A dual flushing system that optimizes conservation by selecting the preferred flush volume.
E-MAX®	High performance, high-efficiency flushing technology using only 1.28 GPF with a 3" wide flush valve, large trapway, and extra-large siphon jet.
G-MAX®	A reliable flushing technology with 3" wide flush valve, large trapway, and extra-large siphon jet.
CEFIONTECT®	Ceramic glaze minimizes waste from sticking to porous ceramic surfaces
UNIVERSAL HEIGHT	Toilet height that allows for a more comfortable height position across a wide range of users.
SKIRTED DESIGN	The trapway is concealed by smooth porcelain, making the toilet easier to clean.
LINEARCERAM®	Material used for lavatories that achieves an extremely thin design yet two times as strong as standard fireclay.
LUMINIST®	An epoxy resin material that combines the translucence of glass with exceptional impact and heat resistance.
WATER SAVING	Water efficient toilets designed with 1.28 gallons per flush or less.

WASHLET®

TOTO WASHLET	An electronic bidet seat featuring adjustable warm water cleansing, heated seat, dryer, deodorizer and much more.
AIR-IN WONDER-WAVE®	Air rich water droplets to produce a more comfortable washing sensation and deliver more thorough cleansing with less water consumption.
WASHLET® +	WASHLET and toilet set with a concealed connection that is specially designed for a seamless installation.
ACTILIGHT®	Special glaze combined with Clean Light work together to easily wash waste away on the toilet bowl.
EWATER+®	After each flush, EWATER+ mists the wand and toilet bowl, reducing the need for harsh cleaning chemicals.
PREMIST®	PREMIST wets the surface of the toilet bowl, aiding in the removal of waste and resulting in a better clean.
AUTO FLUSH	No need to touch buttons or handles and never worry about someone forgetting to flush — it's automatic after each use.
AUTO OPEN / CLOSE LID	Eliminating the need to touch the toilet surfaces, the lid automatically opens and closes when the toilet is approached and departed.
DEODORIZER	Highly effective deodorizing automatically takes places inside the toilet bowl both during and immediately after use, leaving no disturbing odors.

HEATED SEAT	The moment you approach the toilet, the seat begins rapidly warming to a comfortable temperature.
WARM AIR DRYER	Enjoy the ease and comfort of drying with the temperature-adjustable warm-air dryer.

SHOWER

SAFETY THERMO®	Shape Memory Alloy (SMA) thermostatic valve that prevents a sudden, unwanted increase in water temperature.
AERO-JET+®	Uses air injection technology to increase water volume with an additional pulsating feature for a more invigorating shower experience.
AERO-JET®	Uses air injection technology to increase water volume by adding air into each water droplet, creating voluminous droplets while using less water.
CASCADE FLOW	Curved waterfall-like water stream that evenly warms the entire body.
GYROSTREAM®	Rotating shower nozzle with pulsating water stream that creates a massaging effect.
MINI UNIT	Unified exterior sizes for concealed shower valves creating a balanced bathroom space.
WARM SPA®	The feeling of a warm bath in a shower with water flow that envelopes and warms the body efficiently with no splash.
COMFORT WAVE®	A mix of large droplets and standard spray creates a shower with moderate intensity and just the right amount of stimulation.
ACTIVE WAVE®	Large droplets of water producing a more vigorous, high intensity shower.

FAUCET

COMFORT GLIDE®	Precise and easy flow control of water based on user's touch.
SOFT FLOW	Keeps splashing to a minimum for comfortable use and soft to the touch water.
ECOPOWER®	ECOPOWER indicates sensor faucets and flush valves that are powered by flowing water.

TUB

ZERO DIMENSION®	The Flotation Tub's specific reclined bathing posture reduces stress on the body's joints encouraging deep muscular and mental relaxation.
RECLINE COMFORT®	Reclined bathing position that embraces the neck and back to provide a deep sensation of relaxation and tranquility.
HYDROHANDS	Deeply stimulating water massage gives the feeling of real hands kneading tired muscles.

SALES SUPPORT GUIDE

VERSION 2 (APRIL 2022)

NEXT
PLUMBING • HYDRONICS
289 982 NEXT(6398)
300 Galcat Drive Vaughan ON L4L 0B9
nextsupply.ca